1. Chemical Reactions and Equations - Board Exam Questions

2 Mark Questions

1) *A student performs the following experiment in his school laboratory. List two observations to justify that in this experiment a chemical change has taken place.*

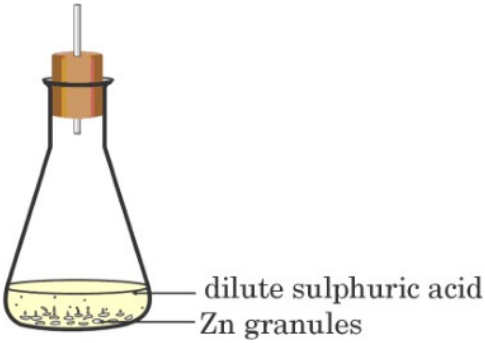

• A gas is given out (bubbles).
• The temperature changes (the flask becomes warm).

2) *"Dil. HCl is added to Zn granules." How will you prove that chemical change has taken place here? Support your response with two arguments.*
• Bubbles of gas are seen.
• The colour changes: the zinc changes from silvery grey to black.

3) *Name the type of chemical reaction in which calcium oxide reacts with water. Justify your answer by giving balanced chemical equation for the chemical reaction.*

Combination reaction, because only one product is formed.

$CaO(s) + H_2O(l) \rightarrow Ca(OH)_2(aq) + Heat$

4) *When magnesium ribbon is burnt in air, an ash of white colour is produced. Write chemical equation for the reaction giving the chemical name of the ash produced. State the type of chemical reaction giving justification for your answer.*

$2Mg + O_2 \rightarrow 2MgO$

The ash is magnesium oxide.

It is a combination reaction, because two substances join to form a single product.

5) *Define oxidation. Identify and name the substance oxidised in the following reaction: $CuO + H_2 \rightarrow Cu + H_2O$*

Oxidation is the gain of oxygen by a substance.

Hydrogen (H_2) is oxidised, because it gains oxygen and becomes water.

6) *State whether the given chemical reaction is a redox reaction or not. Justify your answer. $MnO_2 + 4HCl \rightarrow MnCl_2 + 2H_2O + Cl_2$*

Yes, it is a redox reaction.

HCl is oxidised to Cl_2 (it loses hydrogen).

MnO_2 is reduced to $MnCl_2$ (it loses oxygen).

7) *What is observed when hydrated ferrous sulphate crystals are heated in a dry boiling tube? Give balanced chemical equation(s) of the reaction(s) that occur(s).*

Water droplets are seen on the upper, cooler part of the tube.

$FeSO_4 \cdot 7H_2O \rightarrow FeSO_4 + 7H_2O$

$2FeSO_4 \xrightarrow{\text{(heat)}} Fe_2O_3 + SO_2 + SO_3$

8) *A crystalline substance of green colour 'X' emits gases of characteristic odour when heated over a flame. It first loses water and changes colour. On further heating, it decomposes and produces a solid compound Y. (a) Identify 'X' and 'Y'. (b) State the change in colour observed when 'X' is heated.*

(a) X: $FeSO_4 \cdot 7H_2O$ (ferrous sulphate crystals) Y: Fe_2O_3 (ferric oxide)

(b) Green changes to white.

9) *Giving one example of each, differentiate between a displacement reaction and a double displacement reaction.*

Displacement reaction	Double displacement reaction
A more reactive metal pushes out a less reactive metal from its compound.	The reactants exchange their ions.
$CuSO_4$ + Zn 'ZnSO$_4$ + Cu	Na_2SO_4 + $BaCl_2$ 'BaSO$_4$ + 2NaCl

10) *"No precipitation reaction can occur without exchange of ions between the two reactants." Justify this statement giving a balanced chemical equation for the reaction.*

A precipitate forms only in a double displacement reaction. In it, the reactants exchange ions, and one product is insoluble, so it settles as a precipitate.

$Na_2SO_4(aq) + BaCl_2(aq) \rightarrow BaSO_4(s)$ (precipitate) + 2NaCl(aq)

11) *Write chemical equation for the chemical reaction which occurs when the aqueous solutions of barium chloride and sodium sulphate react together. Write the symbols of the ions present in the compound precipitated in the reaction.*

$BaCl_2(aq) + Na_2SO_4(aq) \rightarrow BaSO_4(s) + 2NaCl(aq)$

Ions in the precipitate ($BaSO_4$): Ba^{2+} and SO_4^{2-}

12) *What is observed when aqueous solutions of potassium iodide and lead nitrate are mixed together? Name the type of reaction and write the chemical equation for the reaction that occurs.*

A yellow precipitate of lead iodide is formed.

It is a double displacement reaction.

$Pb(NO_3)_2 + 2KI \rightarrow PbI_2 + 2KNO_3$

13) *Identify the type of each of the following reactions stating the reason for your answers. A. $Fe_2O_3 + 2Al \rightarrow Al_2O_3 + 2Fe$ + heat B. $Pb(NO_3)_2 + 2KI \rightarrow PbI_2(\downarrow) + 2KNO_3$*

A. Exothermic displacement reaction: heat is given out, and aluminium pushes out iron.

B. Double displacement reaction: the reactants exchange their ions.

3 Mark Questions

1) *With the help of an appropriate example, justify that some of the chemical reactions are determined by (a) Change in temperature, (b) Evolution of a gas, and (c) Change in colour. Give chemical equation for the reaction involved in each case.*

(a) Change in temperature: $CaO + H_2O \rightarrow Ca(OH)_2 + Heat$

(b) A gas is given out: $Zn + H_2SO_4 \rightarrow ZnSO_4 + H_2(g)$

(c) Change in colour: $CuSO_4 \cdot 5H_2O$ (blue) —(heat)→ $CuSO_4$ (white) + $5H_2O$

2) *Write one chemical equation each for the chemical reaction in which the following have taken place: (i) Change in colour (ii) Change in temperature (iii) Formation of precipitate. Mention colour change/temperature change (rise/fall)/compound precipitated along with equation.*

(i) The blue solution turns green.

$Fe(s) + CuSO_4(aq)$ (blue) $\rightarrow FeSO_4(aq)$ (green) $+ Cu(s)$

(ii) The temperature rises.

$NaOH(aq) + HCl(aq) \rightarrow NaCl(aq) + H_2O(l) + Heat$

(iii) A yellow precipitate of PbI_2 is formed.

$Pb(NO_3)_2(aq) + 2KI(aq) \rightarrow PbI_2(s)$ (yellow) $+ 2KNO_3(aq)$

3) *Why do we balance a chemical equation? Name and state the law that suggests the balancing of a chemical equation? Balance the following chemical equation: $Zn + H_3PO_4 \rightarrow Zn_3(PO_4)_2 + H_2$*

We balance an equation so that the number of atoms of each element is the same before and after the reaction.

Law of conservation of mass: Mass can neither be created nor destroyed in a chemical reaction.

$3Zn + 2H_3PO_4 \rightarrow Zn_3(PO_4)_2 + 3H_2$

4) *Write balanced chemical equation for the reactions that occur when (a) steam is passed over red hot iron. (b) natural gas is burnt in air. (c) glucose reacts with oxygen in the cells of our body and provides energy.*

(a) $3Fe + 4H_2O \rightarrow Fe_3O_4 + 4H_2$

(b) $CH_4 + 2O_2 \rightarrow CO_2 + 2H_2O$

(c) $C_6H_{12}O_6 + 6O_2 \rightarrow 6CO_2 + 6H_2O$ + Energy

5) *Why are decomposition reactions called the opposite of combination reactions? Write one chemical equation each for these two types of reactions mentioning the name of the reactant(s) and the product(s) involved in the reactions.*

In a combination reaction, two or more reactants join to form one product. In a decomposition reaction, one reactant breaks into two or more products. So they are opposite.

Combination: C(s) (carbon) + O_2(g) (oxygen) → CO_2(g) (carbon dioxide) + Heat

Decomposition: $CaCO_3$(s) (calcium carbonate) —(heat)→ CaO(s) (calcium oxide) + CO_2(g) (carbon dioxide)

6) *(i) Define the term decomposition reaction. Write one chemical equation each for decomposition reaction where energy is supplied in the form of heat, light or electricity. (ii) Decomposition of vegetable matter into compost is considered an exothermic reaction. Why?*

(i) A reaction in which one reactant breaks down into two or more products.

Heat: $CaCO_3(s) \xrightarrow{heat} CaO(s) + CO_2(g)$

Light: $2AgCl(s) \xrightarrow{sunlight} 2Ag(s) + Cl_2(g)$

Electricity: $2H_2O(l) \xrightarrow{electric\ current} 2H_2(g) + O_2(g)$

(ii) Because heat is given out.

7) *2 g of green coloured crystals of ferrous sulphate are heated in a dry boiling tube. Name the type of chemical reaction taking place. Write the balanced chemical equation for the reaction. Is this an exothermic or an endothermic reaction?*

Thermal decomposition reaction.

$2FeSO_4(s) \xrightarrow{(heat)} Fe_2O_3(s) + SO_2(g) + SO_3(g)$

It is an endothermic reaction (heat is taken in).

8) *What happens when (i) lead (II) nitrate is heated? (ii) iron (II) sulphate is heated? (iii) silver chloride is exposed to sunlight? Write balanced chemical equations of the reactions involved in support of your answer.*

(i) Brown fumes of nitrogen dioxide are given out.

$2Pb(NO_3)_2(s) \xrightarrow{(heat)} 2PbO(s) + 4NO_2(g) + O_2(g)$

(ii) A smell of burning sulphur is noticed.

$2FeSO_4(s) \xrightarrow{(heat)} Fe_2O_3(s) + SO_2(g) + SO_3(g)$

(iii) White silver chloride turns grey.

$2AgCl(s) \xrightarrow{(sunlight)} 2Ag(s) + Cl_2(g)$

9) *Account for the following: (a) White silver chloride turns grey when exposed to sunlight. (b) Lead (II) nitrate on heating releases brown fumes. (c) Bags of oil and fat containing food items are flushed with nitrogen gas.*

(a) Silver chloride breaks down into silver, which is grey.

(b) Lead nitrate breaks down and gives out nitrogen dioxide (NO_2), which is brown.

(c) To stop the fats and oils from getting oxidised (going bad).

10) *Silver chloride kept in a china dish turns grey in sunlight. (a) Write the colour of silver chloride when it was kept in the china dish. (b) Name the type of chemical reaction taking place and write the chemical equation for the reaction. (c) State one use of the reaction. Name one more chemical which can be used for the same purpose.*

(a) White

(b) Decomposition reaction.

$2AgCl \xrightarrow{\text{(sunlight)}} 2Ag + Cl_2$

(c) It is used in black and white photography. Silver bromide (AgBr) can also be used.

11) *(i) While electrolysing water before passing the current some drops of an acid are added. Why? Name the gases liberated at cathode and anode. Write the relationship between the volume of gas collected at anode and the volume of gas collected at cathode. (ii) What is observed when silver chloride is exposed to sunlight? Give the type of reaction involved.*

(i) The acid helps water to conduct electricity.

Cathode: hydrogen Anode: oxygen

Volume at anode : volume at cathode = 1 : 2

(ii) White silver chloride turns grey. It is a decomposition reaction.

12) *Amrita electrolysed distilled water using the set-up shown in figure 1. She was expecting two gases to be evolved at the anode and cathode respectively. Suddenly, she realised that the bulb in the circuit did not glow when she used distilled water (figure 2). After this realization, she added a substance to the distilled water for electrolysis to take place. A. Which gas was she expecting to be formed at the anode and which one at the cathode respectively? B. Why did the bulb not glow when Amrita passed electricity through distilled water? C. Which substance was added by Amrita to distilled water to get the expected result?*

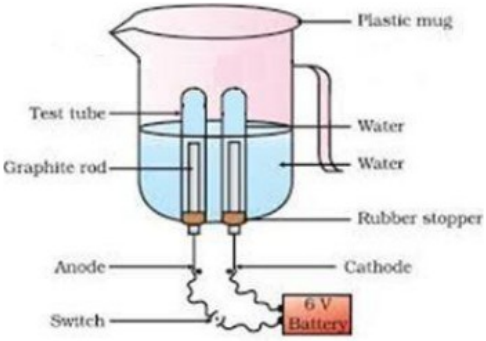

Fig.1

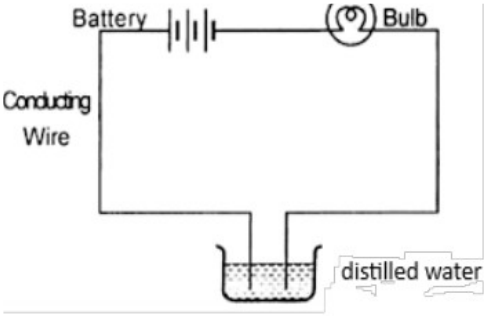

Fig. 2

A. Oxygen at the anode and hydrogen at the cathode.
B. Distilled water does not conduct electricity well.
C. A few drops of sulphuric acid (H_2SO_4).

13) *(a) Name the substance oxidised and reduced in the following reaction: ZnO + C → Zn + CO (b) Balance the following chemical reaction: $Pb(NO_3)_2$ + KI → PbI_2 + KNO_3 (c) Give one example each of electrolytic decomposition and decomposition by sunlight.*

(a) Oxidised: C (it gains oxygen). Reduced: ZnO (it loses oxygen).

(b) $Pb(NO_3)_2 + 2KI \rightarrow PbI_2 + 2KNO_3$

(c) By electricity: $2H_2O \xrightarrow{\text{(electricity)}} 2H_2 + O_2$

By sunlight: $2AgCl \xrightarrow{\text{(sunlight)}} 2Ag + Cl_2$

14) *Seema took a small amount of copper powder in a china dish and heated it. What changes will she observe on heating? When H_2 gas is passed over this heated substance, what visible changes will be seen in it? Give the chemical equations of the reactions involved, along with the names and colours of the products in each case.*

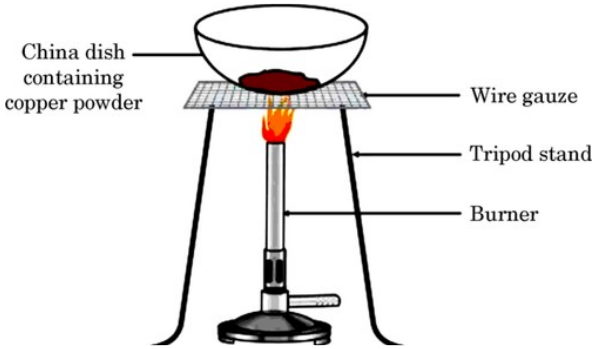

On heating, the brown copper powder turns black. Oxygen joins the copper and forms copper oxide.

$2Cu + O_2$ —(heat)→ 2CuO (copper oxide, black)

When hydrogen is passed over it, the black substance turns brown again.

$CuO + H_2$ —(heat)→ Cu (copper, brown) + H_2O

15) *(a) Identify the reducing agent in the following reactions: (i)* $4NH_3 + 5O_2 \rightarrow 4NO + 6H_2O$ *(ii)* $H_2O + F_2 \rightarrow HF + HOF$ *(iii)* $Fe_2O_3 + 3CO \rightarrow 2Fe + 3CO_2$ *(iv)* $2H_2 + O_2 \rightarrow 2H_2O$ *(b) Define a redox reaction in terms of gain or loss of oxygen.*

(a) (i) NH_3 (ii) H_2O (iii) CO (iv) H_2

(b) A reaction in which one substance gains oxygen and another loses oxygen at the same time is a redox reaction.

16) *Study the experimental set-up shown in the diagram and write chemical equation for the chemical reaction involved. Name and define the type of reaction. List two other metals which can be used in place of iron to show the same type of reaction with copper sulphate solution.*

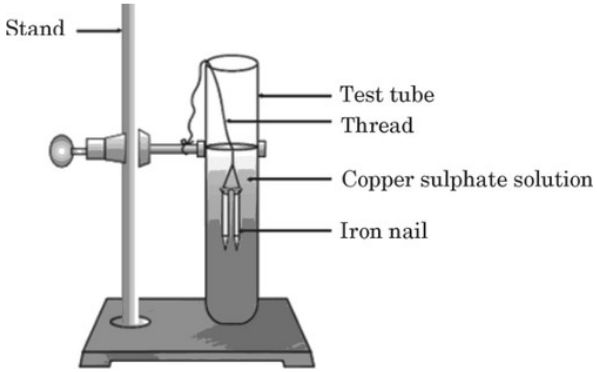

$Fe(s) + CuSO_4(aq) \rightarrow FeSO_4(aq) + Cu(s)$

Displacement reaction: a more reactive metal pushes out a less reactive metal from its salt solution.

Other metals: zinc and aluminium.

17) *i) A + BC → AC + B ii) AB + CD → AC + BD. Identify the types of reaction mentioned above in (i) and (ii). Give one example for each type in the form of a balanced chemical equation.*

i) Displacement reaction.

$Fe(s) + CuSO_4(aq) \rightarrow FeSO_4(aq) + Cu(s)$

ii) Double displacement reaction.

$Na_2SO_4(aq) + BaCl_2(aq) \rightarrow BaSO_4(s) + 2NaCl(aq)$

18) *(a) Define a double displacement reaction. (b) Write the chemical equation of a double displacement reaction which is also a (i) Neutralization reaction and (ii) Precipitation reaction. Give justification for your answer.*

(a) A reaction in which the reactants exchange their ions.

(b) (i) $HCl + NaOH \rightarrow NaCl + H_2O$. An acid reacts with a base to form salt and water.

(ii) $Na_2SO_4 + BaCl_2 \rightarrow BaSO_4 + 2NaCl$. An insoluble solid (precipitate of $BaSO_4$) is formed.

19) *Define a precipitation reaction. Give its example and also express the reaction that occurs in the form of a balanced chemical equation.*

A reaction in which an insoluble solid (precipitate) is formed is a precipitation reaction.

Example: When sodium sulphate solution is added to barium chloride solution, a white precipitate of barium sulphate forms.

$Na_2SO_4(aq) + BaCl_2(aq) \rightarrow BaSO_4(s) + 2NaCl(aq)$

5 Mark Questions

1) *What is a chemical reaction? Describe one activity each to show that a chemical change has occurred in which*
(i) change of colour, and
(ii) change in temperature has taken place.

In a chemical reaction, the bonds between atoms break and new bonds form, so new substances are made.

(i) Take potassium iodide solution in a test tube and add lead nitrate solution. The colourless solutions form a yellow precipitate.
(ii) Add water to calcium oxide. It reacts strongly and forms slaked lime (calcium hydroxide), and a lot of heat is given out.

2) *(i) Define a decomposition reaction. How can we say that (I) electrolysis of water, and (II) blackening of silver bromide when exposed to sunlight, are decomposition reactions? Mention the type of energy involved in each case.*
(ii) "The type of reactions in which (I) calcium oxide is formed, and (II) calcium hydroxide is formed are opposite reactions to each other." Justify this statement with the help of chemical equations.

(i) A reaction in which one reactant breaks down into two or more products.
(I) Water breaks into hydrogen and oxygen. Energy: electrical energy.
(II) Silver bromide breaks into silver and bromine. Energy: light energy.

(ii) (I) Calcium oxide is formed by decomposition, which takes in heat (endothermic):

$CaCO_3(s)$ —(heat)→ $CaO(s) + CO_2(g)$

(II) Calcium hydroxide is formed by combination, which gives out heat (exothermic):

$CaO + H_2O \rightarrow Ca(OH)_2$ + Heat

3) *I. Refer to the dialogue between Daljeet and Avik in the chemistry lab. They have learnt about decomposition reactions. Who has understood decomposition reactions correctly? Justify your answer.*
Daljeet: During a decomposition reaction, a substance decomposes to give two simpler compounds. $MgCO_3$ decomposes on heating to magnesium oxide and carbon dioxide.
Avik: No, during a decomposition reaction, a substance decomposes to give two elements. Water on electrolysis gives hydrogen and oxygen, both are elements.
II. Analyse the observations given in following two cases. Are these observations correct? Give reasons to support your answer.
(i) Iron fillings are added to an aqueous solution of magnesium sulphate. Observation: The colourless solution turns greenish due to formation of iron sulphate.
(ii) Aluminium metal is added to dilute sulphuric acid. Observation: Brisk effervescence are seen due to evolution of a gas.

I. Both are only partly right. In decomposition, one compound breaks into simpler substances. The products can be elements or compounds.

$MgCO_3$ breaking into magnesium oxide and carbon dioxide is decomposition, even though both products are compounds.

Water breaking into hydrogen and oxygen is also decomposition, and both products are elements.

II. (i) Not correct. Iron is less reactive than magnesium, so it cannot push magnesium out.

(ii) Not correct. Hydrogen gas is formed, which gives only a few bubbles. Brisk effervescence is seen when carbon dioxide is formed.

4) *I. Refer to the dialogue between Alisha, Drishti and Bhushan in the chemistry lab. They are discussing rusting of iron and formation of ammonia gas. Who all do you agree with and why?*
Alisha: The formation of ammonia by reaction of nitrogen with hydrogen is a reduction reaction.
Drishti: Both rusting of iron and formation of ammonia are redox reactions.
Bhushan: Rusting of iron is an oxidation reaction.
II. Assess the following chemical equations. Identify the error(s) and rewrite the equation after correction.
(i) $MgCl_2 + AgNO_3 \rightarrow AgCl_2 + MgNO_3$
(ii) $Al + H_2SO_4 \rightarrow Al_2SO_4 + H_2O$

I. Drishti is correct. (Alisha and Bhushan are only partly correct.)

Oxidation and reduction always happen together. In making ammonia, nitrogen is reduced and hydrogen is oxidised. In rusting, iron is oxidised and oxygen is reduced.

II. (i) The formulas of the products are wrong, and the equation is not balanced.

$MgCl_2 + 2AgNO_3 \rightarrow 2AgCl + Mg(NO_3)_2$

(ii) The products are wrong: hydrogen gas is formed, not water.

$2Al + 3H_2SO_4 \rightarrow Al_2(SO_4)_3 + 3H_2$